PL

PL20C/PL25

Magnescale® Digiruler®

Head cable unit

- Output signal: AB quadrature signal, compilant with EIA-422
- Resolution: 10 μm
- Max. response speed: 300 m/min (varies with the read head and settings).
- Excellent resistance to workshop conditions (IP65).
- Resistant to oil, dirt, vibration, and shock.

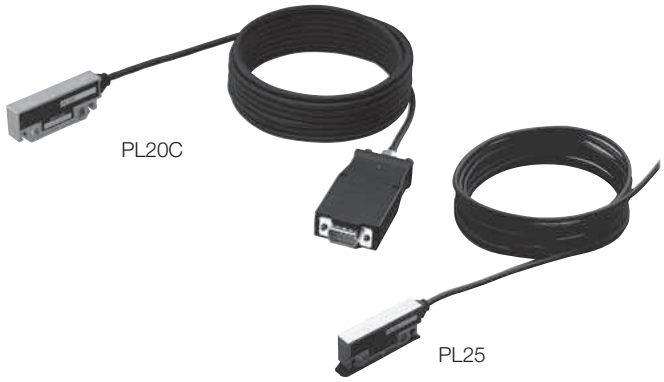

Example for connection

Scale	Headcable	Cable	Interpolator
SL110/130	PL25	CE08 CK-T12/13/14/15/16	MJ100/110
	Headcable	Counter	
	PL20C	LH71A/72 LY71/72	

Dimensions

PL20C-**C(Metal armar added)

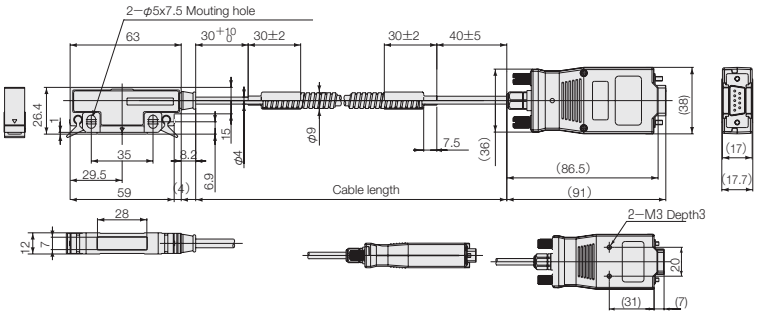

PL25

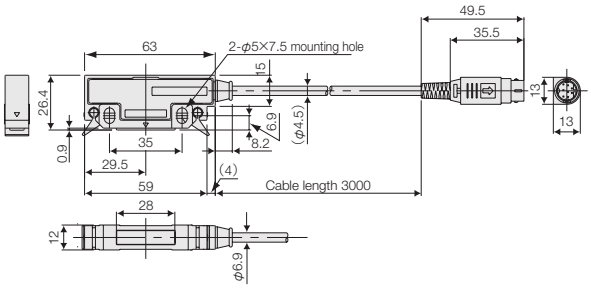

PL20C-**

Unit : mm/inch

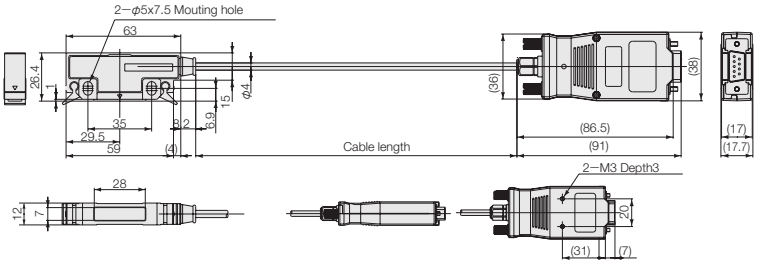

Specifications

Model	PL20C						PL25
	-3	-5	-A	-B	-C	-D	-3
Read head cable length	3 m/9.8'	5 m/16.4'	10 m/32.8'	15 m/49.2'	20 m/65.6'	30 m/98.4'	3 m/9.8'
Scale-Read head clearance	Max. 1.5 mm/ 0.059" (no contact)						
Protective design grade	Equivalent to IP67						Equivalent to IP65
Operating temperature	-5 ℃ to 45 ℃ / 23 ℉ to 113 ℉						
Storage temperature	-10 ℃ to 50 ℃ / 14 ℉ to 122 ℉						
Compatible scale	SL110 and SL130						
Compatible Interpolator	—						MJ100/110
Compatible displays	LH and LY						—
Head mtg. screw tightening torque	0.7 to 1.1N • m						
Extension cable (option)	—						CE08-01…1m,CE08-03…3m, CE08-05…5m,CE08-10…10m, CE08-15…15m

*For cable lengths greater than 15 meters, please contact our sales office.